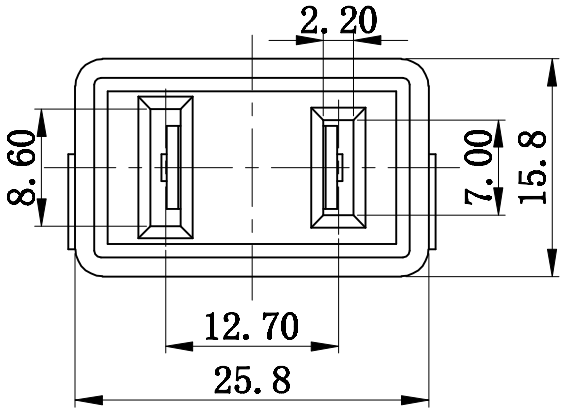

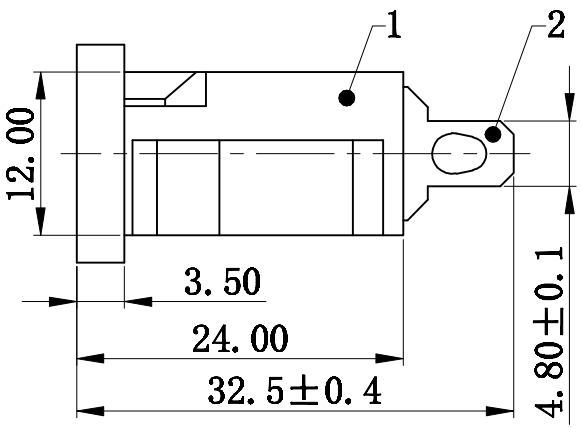

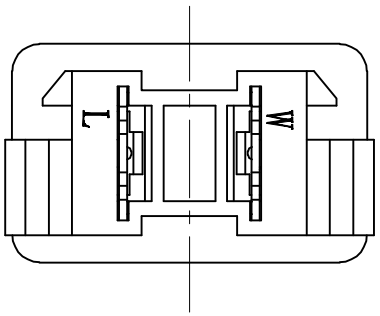

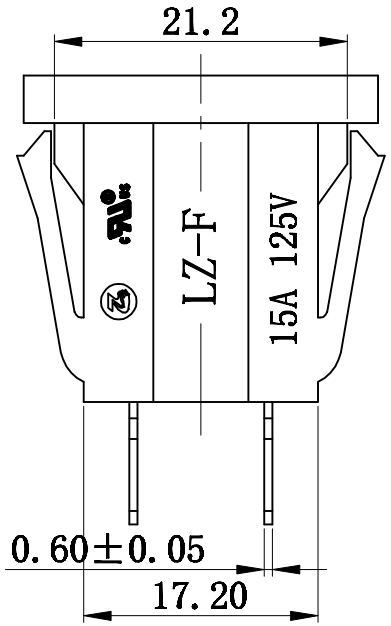

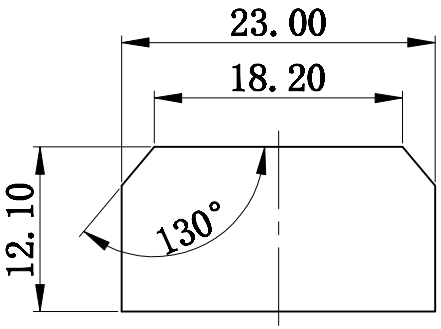

PANEL CUT-OUT

No.	Name	Material	Qty
1	Body	PA66	1
2	shrapnel	Brass t0.6	2

Rating :
15A 125V AC T105 UL cUL
10A 250V AC

Insert And Extract Force: 1.36kgf~6.8kgf

Operating Life: ≥5000 cycles

Withstand Voltage: Between all terminals:2500VAC (50-60Hz)1min
terminals to Base:3750V AC (50-60Hz)1min
Leakage Current : 1mA

Insulation Resistance: ≥100MΩ 500V DC

A4			
A3			
A2			
A1			
REV.	DATE	REVISION DESCRIPTION	ISSUE

COMMON TOLERANCE :	
UP TO 5	±0.20
ABOVE 5 TO 30	±0.30
ABOVE 30	±0.50
ANGULAR	±5°

YUEQING LANZ Electronics Co.,Ltd

UNIT	mm	PROJECTED		PRODUCT NAME	Ac Outlet	SCALE	Free
DRAWN BY	WU YU	CHECKED BY		MODEL NO.	LZ-F-M2		
DATE	2021.5.11	APPROVAL BY		DWG NO.	LANZ/CRS-LZFM2		